TECHNICAL BULLETIN
Glidermatic operator
GRD 2000 - Photo Sensor Wiring Diagram

Issue date: February 2008

Title: GRD 2000 Photo Sensor Wiring Diagram

GRD 2000 BOARD: PHOTO SENSOR WIRING DIAGRAM

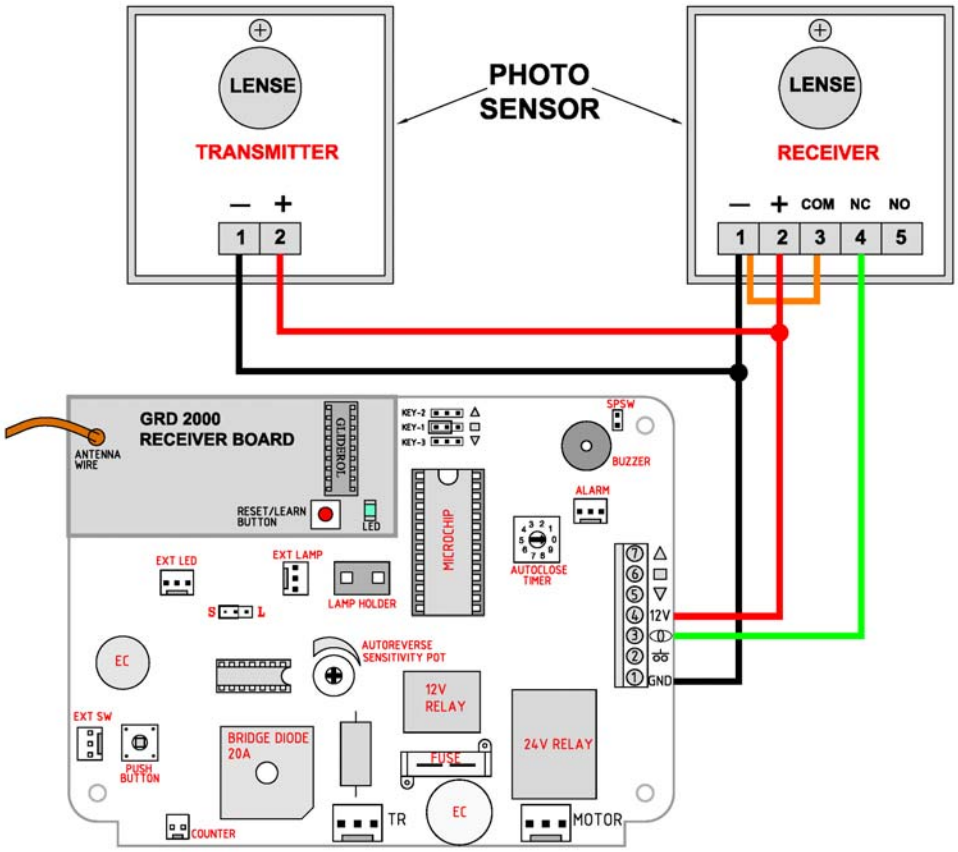

GRD - 2000 MAIN BOARD

CAUTION: Check the type of board and variations in location of connections (terminals) before connecting.

WIRING (CABLE CONNECTION)

1-2 : 12~24Volt AC / DC
3 : COMMON
4 : NC - Normally Close
5 : NO - Normally Open

IR200
PHOTO SENSORS SPECIFICATIONS:

POWER SOURCES : *12/24 VOLT AC DC*
POWER CONSUMPTION
TRANSMITTER: 25 mA
RECEIVER: 35mA
RELAY: *FLIP FLOP BASED 2 RELAYS 1A/24VOLT*
TRANSMISSION FREQUENCY : *800Hz + - 5%*
IMPULSE LENGTH : *<10us*

Important Note: Some brand of Photo Sensors may not work when connected as per the above wiring diagram in that instance please connect the ***photo sensor terminal*** *(⦶)* of GRD2000 board to ***Normally Open (NO)*** terminal instead of Normally Close (NC) in the Photo Sensor Receiver.